CBI123A ALL In One

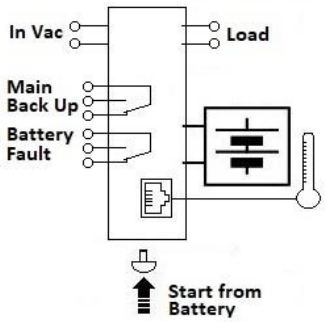

Input: Single-phase 115 – 277 Vac
Output Load: power supply 12 Vdc; 3 A
Output Battery: charging 12 Vdc; 3 A
Suited for the following battery types: Open Lead Acid, Sealed Lead Acid, Lead Gel, Li-Ion and Ni-Cd
Automatic diagnostic of battery status. Charging curve IUoU, constant voltage and constant current Battery Life Test function (Battery Care)
Switching technology, output voltage 10-14.4Vdc Three charging levels: Boost, Float and Recovery
Protected against short circuit and inverted polarity
Signal output (contact free) for discharged or damaged battery
Signal output (contact free) for mains or Back-UP
Protection degree IP20 - DIN rail; Space saving

Technical features

Thanks to the All In One units (DC-UPS), it will be possible to optimize power management. The available power is automatically allocated between load and battery, supplying power to the load is the first priority of the unit thus it is not necessary to double the power, because also the power going to the battery will go to the load if the load so requires. The maximum available current on the load output is 2 times the value of the device rated current In. We call "Battery Care" the concept base on algorithms that implement rapid and automatic charging, battery charge optimization during time, flat batteries recovery and real time diagnostic during installation and operation. The Real Time Auto-diagnostic system, monitoring battery faults such as, battery Sulfated, elements in short circuit, accidental reverse polarity connection, disconnection of the battery, they can easily be detected and removed by help of Blink Code of Diagnosis Led; during the installation and after sell. The continuous monitoring of battery efficiency reduces battery damage risk and allows a safe operation in permanent connection. Each device is suited for all battery types by means of jumpers it is possible setting predefined curves for Open Lead Acid, Sealed Lead Acid, Gel, Ni-Cd (option). They are programmed for two charging levels, boost and charge, but they can be changed to single charging level by the user. A rugged casing with bracket for DIN rail mounting provides IP20 protection degree. They are extremely compact and cost-effective.

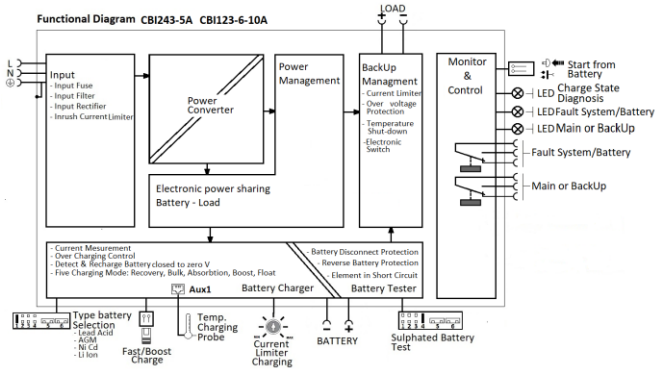

Norms and Certifications

In Conformity to: c UL us EN60950 / UL60950-1 and CSA C22.2 No. 60950-1-07 (Information Technology Equipment) – Safety – Part1: General Requirement. Electrical safety; EN54-4 Fire Detection and fire alarm systems; 89/336/EEC EMC Directive; 2014/35/UE (Low Voltage); Safety EN IEC 62368-1: 2014/AC:2015; DIN41773 (Charging cycle); Emission: IEC 61000-6-3; Immunity: IEC 61000-6-2. CE.

Climatic Data

Ambient temperature (operation)	**-25 ÷ +70°C**
De Rating Tª > 50°C	**- 2.5%(In) / °C**
Ambient temperature Storage	**-40 ÷ +85°C**
Humidity at 25 °C no condensation	**95% to 25°C**
Altitude: 0 to 2 000m - 0 to 6 560ft	**No restrictions**
Altitude: 2 000 to 6 000m - 6 560 to 20 000ft	**De-rating 5°C/1000m**
Cooling	**Auto convention**

General Data

Insulation voltage (IN/OUT)	**3000 Vac**
Insulation voltage (Input / Earth, PE)	**2000 Vac**
Insulation voltage (Out Load & Battery / Earth, PE)	**500 Vac**
Insulation voltage (Out Load & Battery / Fault System & Main or Back Up terminal)	**500 Vac**
Protection Class (EN/IEC 60529)	**IP20**
Reliability: MTBF IEC 61709	**> 300.000 h**
Pollution Degree Environment	**2**
Connection Terminal Blocks screw Type	**2,5mm(24–14AWG)**
Protection class (PE Connected)	**I, with PE**
Dimensions (w-h-d)	**65x115x135 mm**
Weight	**0.6 kg approx.**

Input Data

Nominal Input Voltage Vac	**115 – 230– 277**
Voltage range Vac	**90 ÷ 305**
Inrush Current (Vn – In nom. Load) I^2t	**≤ 11 A ≤ 5 msec.**
Frequency	**47 ÷ 63 Hz**
Input Current (115 – 230 – 277 Vac) Max	**1.91- 1.2 – 0.96 A**
Internal fuse (not replaceable)	**4 A**
External Fuse (recommended) MCB curve B	**10 A**

Output Data (internal power supply)

Output Voltage (Vn) / Nominal Current (I_n)	**12 Vdc / 3A**
Output Current I_n = Iload	**3 A**
Efficiency (at 50% of rated current)	**≥ 90 %**
Residual Ripple	**≤ 60 mV_{pp}**
Turn-On delay after applying mains voltage	**1 sec. (max)**
Start up with Strong Load (capacitive load)	**Yes, Unlimited**
Dissipation power load max (W)	**15**
Short-circuit protection)	**Yes**
Over Load protection	**Yes**
Over Voltage Output protection	**Yes (typ. 35 Vdc)**
Overheating Thermal protection	**Yes**

Battery Output

Output Voltage Battery	**Follow the Out Load**
Boost-Fast charge Jumper Configuration 25°C (V/cell). Jumper Configuration battery type	**Lead Acid: 2.4** **NiCd:1.51; Li-ion: 3.65**
Float Charge Jumper Configuration 25°C (V/cell) Jumper Configuration battery type	**Lead Acid: 2.23; 2.25;2.27;2.3** **NiCd:1.4; Li-ion: 3.45**
Max. Time Boost–Bulk charge (Typ. at IN)	**15 h**
Min.Time Boost–Bulk charge (Typ. at IN)	**1 min.**
Recovery Charge	**2 – 10 Vdc**
Charging current max I_{batt}	**6 A ± 5%**
Charging current limiting I_{adj}	**20 ÷ 100 % / I_{bat}**
Reverse battery protection	**Yes**
Sulfated battery check	**Yes by Jumper**
Short circuit Element Detection	**Yes**
Detection of element in short circuit	**Yes**
Quiescent Current max.	**≤ 100 mA**
Charging Curve automatic: IUoU	**4 stage**
Remote Input Control (RTCONN cable)	**Boost / Float**

Load Output

Output voltage Vdc (at I_n)	**10 - 14.4 V (17 Ni-Cd)**
Nominal current I_{load}	**1.1 x I_n A ± 5%**
Continuous current (Without battery) $I_{load=}$ I_n	**3 A**
Continuous current (With battery) $I_{load=}$ I_{n+} I_{batt}	**6 A**
Max. current Output Load (Main) $I_{load\ (4\ sec.)}$	**9 A max.**
Max. current Output Load (Back Up)$I_{load\ (4\ sec.)}$	**6 A max.**
Start From Battery Without Main (Remote Input Control)	**RTCONN (cable)** **Push Button**
Time Buffering; min (switch output off without main input)	**∞: standard** **5 min.: Require SW**
Threshold alarm Battery almost flat	**11.5 – 12 Vdc batt**
LVD. (Protections against total Battery discharge)	**10 – 11 Vdc batt**

Signal Output (free switch contacts)

Main or Backup Input Power	**Yes**
Low Battery	**Yes**
Fault Battery or system	**Yes**

Type of Signal Output Contact

Dry Contact. Current can be switched (EN60947.4.1): Max: DC1: 30 Vdc 1 A; AC1: 60 Vac 1A (Resistive load) Min: 1mA at 5 Vdc (Min permissive load)

Fault System / Low Battery	**C**	**NC**	**NO**
Main or Back Up	**C**	**NC**	**NO**

Signal Input / Output (RJ45)

Temp. Comp. Battery (with external probe): Aux Out	**RJ Temp (cable)**
Remote monitoring LED from Front Device: Aux Out	**RJ 45 (cable)**

[1]Can be adjusted via PC software mode